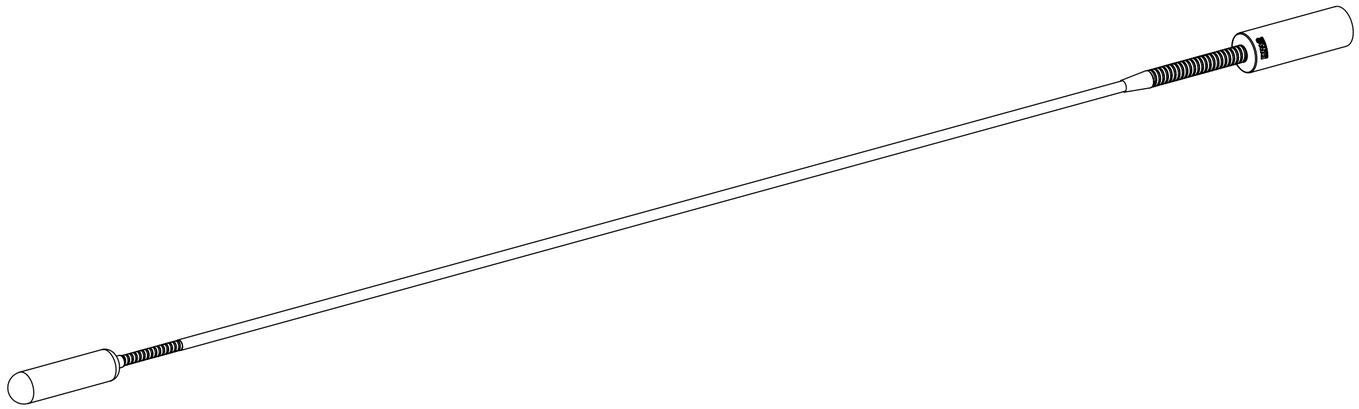

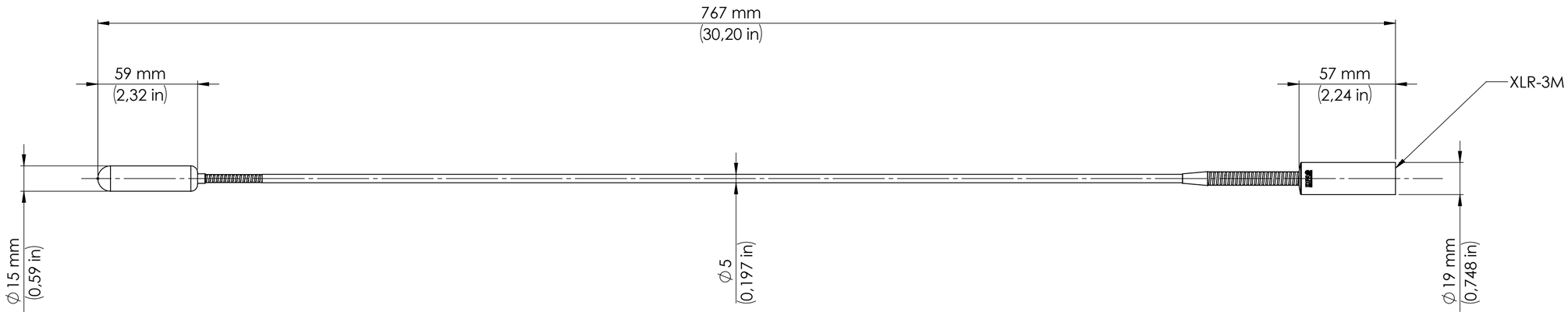


| | | | | | | |
|---|---|---|---|---|---|---|
| DPA MICROPHONES | Designer by: rmj 27-03-2023<br>Changed by: rmj 27-03-2023<br>General tolerances: DS/ISO 2768-1-m | Dimensions: mm | Paper size: A2 | Scale: 1:2 | Page: 1:1 | Revision: |
| DPA Microphones A/S<br>Gydevang 42-44<br>DK-3450 Allerød<br>Denmark<br>Tlf: +45 48142828<br>DPA Microphones A/S<br>Industrivangen 8-10<br>DK-4550 Asnæs<br>Tlf: +45 59645964 | Description:<br>SC4098-BX75 | | Drawing number:<br>4098-DC-G-B01-075 | | | |